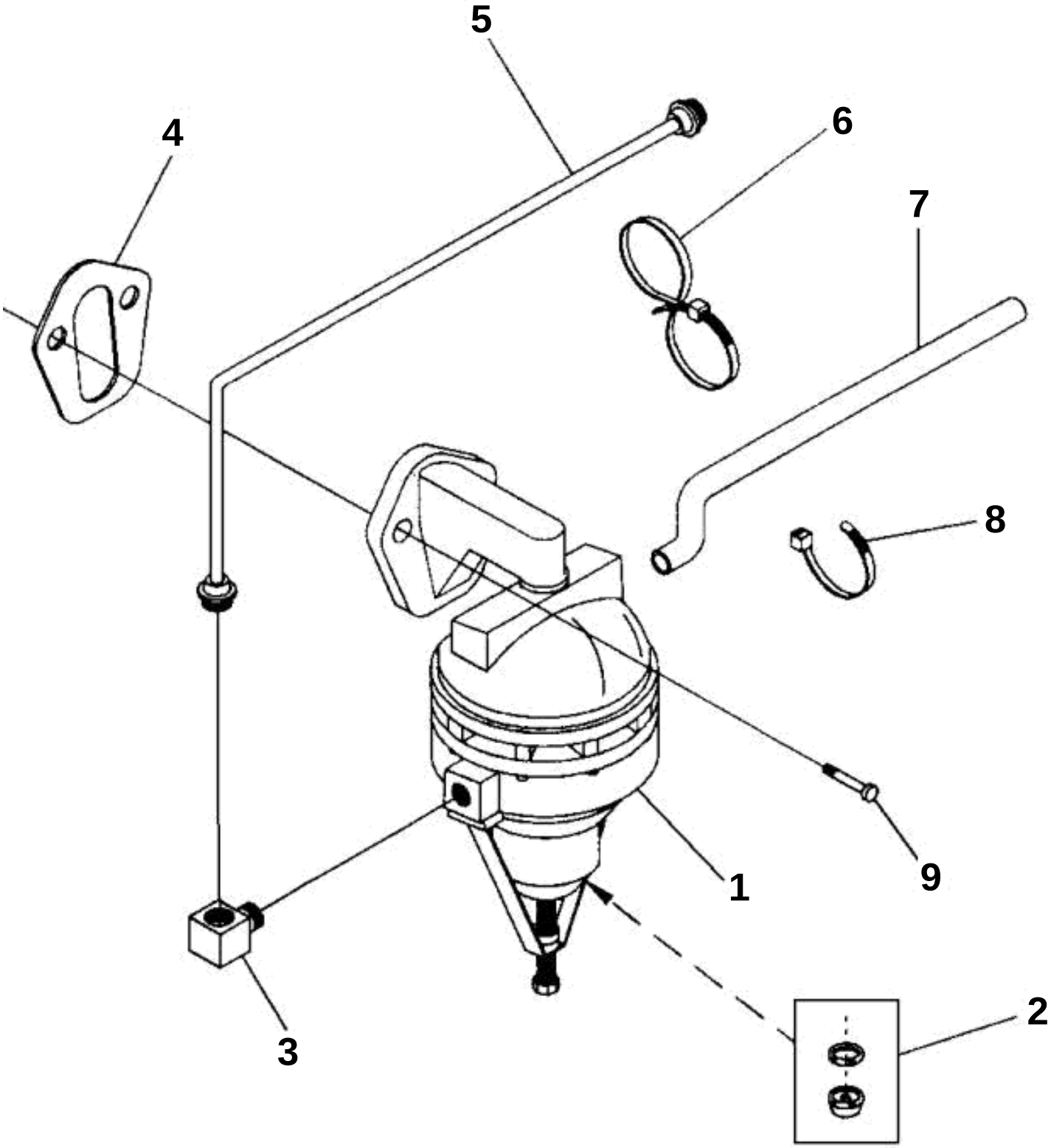
5
4
6
7
8
1
9
3
2

FUEL PUMP & FILTER

REF	PART NO.	QTY	DESCRIPTION	NOTES
1	3854858	1	Fuel pump	
2	3855104	1	· Fuel filter insert	
3	3852453	1	Fitting, Fuel pump outlet	
4	3854865	1	Gasket, Fuel pump to engine	Part of engine gasket kit
5	3857174	1	Fuel pipe, Pump to carburetor	
6	3852486	4	Lock strap, Overflow hose to fuel line	
7	3857432	1	Fuel pump overflow	
8	3852158	1	Lock strap, Overflow hose to fuel pump assy	
9	3853397	2	Screw, Fuel pump to en ine	